REFERENCE STANDARD RADIATION SHIELD for top-class all-weather performance

3rd generation MeteoShield Pro with FARS fan ventilation

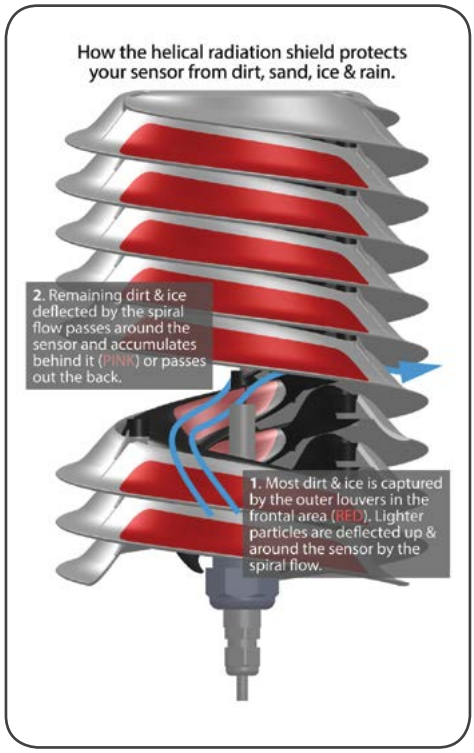



FARS MeteoShield® Pro Gen 3

Designed for climatic reference temperature sensors.

Combines the benefits of the MeteoShield Pro's class-leading natural ventilation with parallel flow fan-aspiration. Due to this, it is a unique and highly reliable solution for precision air temperature measurement. High rates of natural ventilation across the internal temperature sensor due to the helical shape are maintained and only augmented by the fan-assisted flow.

Flow is augmented proportionately based on the solar load to maintain air circulation around the measuring tip of the temperature sensor while minimizing external flow disturbance to the air around the radiation shield to maintain proper temperature measurement height.

High-reliability climatic reference measurement

High reliability is achieved in three ways:

1. When the fan is turned off, the strong natural ventilation of the generation 3 helical MeteoShield Pro design is maintained, since no flow obstructions are present around the sensor inside the shield.
2. Triple redundant independent solar cells, each one facing in a different direction, ensure that icing, dirt, or shadows will not compromise fan power.
3. Due to the angle of the solar cells, even solar loads from reflected solar radiation, which can adversely affect the accuracy of the temperature sensors, are enough to power the fan and assure high accuracy in zero wind conditions.

Keeps your sensors clean

Heavier particles like water & dirt are expelled from the helical flow, thus keeping the sensor cleaner, dryer & ice-free.

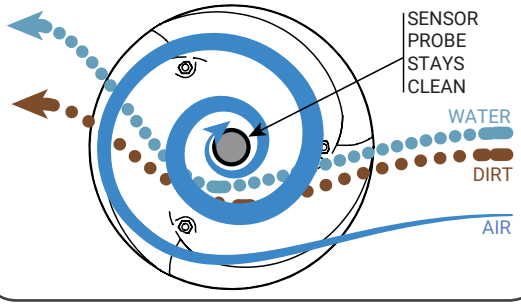

Overheating < 0.1 °C in all environments

- **True reference standard performance:** Proven all-weather accuracy is augmented by fan-aspiration for zero wind and high solar load conditions
- Arguably the lowest air temperature uncertainty solar radiation shield
- WMO compliant climatic reference temperature, humidity and dew point
- Protection of sensors from water spray and dirt buildup
- Exceptional water shedding and return to accuracy after rain
- Precision even in high-reflectivity environments: snow, desert, city, marine...

Measurement standards	
Temperature measurement uncertainty	Fan-aspiration ON: < ±0.1 °C (3σ/99 %) in all-weather, including zero wind. Fan-aspiration OFF: < ±0.1 °C (2σ/95 %) in all-weather, including zero wind * < ±0.1 °C (3σ/99 %) in all-weather, wind stronger than 0.5 m/s * < ±0.2 °C (3σ/99 %) in all-weather, including zero wind *
Fan-aspiration	Aspiration rate is related to solar load. Fan start solar load (0 - 50 °C): < 5 W/m² DNI or < 50 W/m² DHI

Copyright©2017-2022 BARANI DESIGN Technologies s. r. o.

Proper sensor height adjustment

To properly set the sensor height relative to the fan air inlet, use the supplied jig (red). Proper sensor height ensures that the sensor will have very good unobstructed airflow from natural ventilation when the fan is off, and also very good air flow augmentation when the fan is ON.

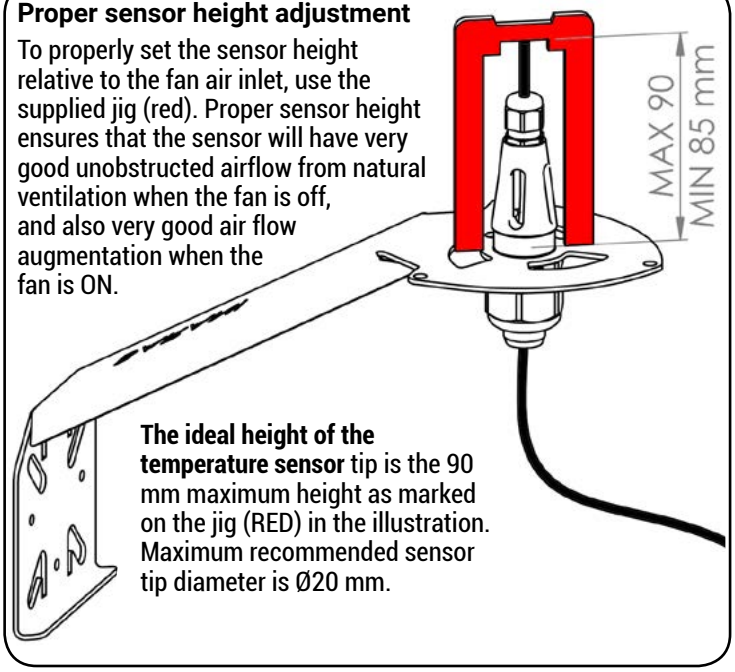

The ideal height of the temperature sensor tip is the 90 mm maximum height as marked on the jig (RED) in the illustration. Maximum recommended sensor tip diameter is Ø20 mm.

Universal radiation shield mount

2.5 mm stainless steel

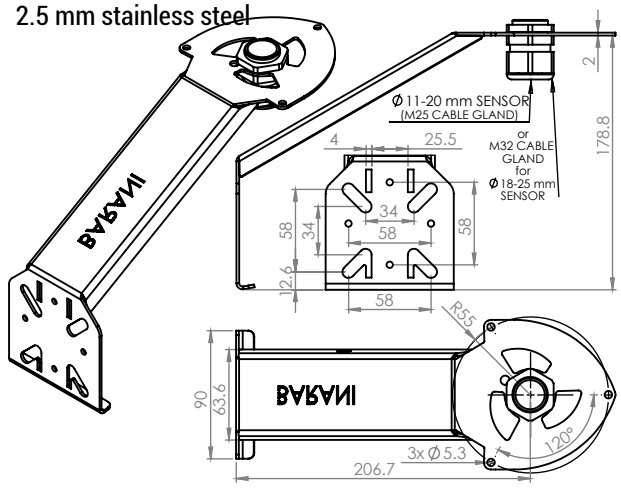

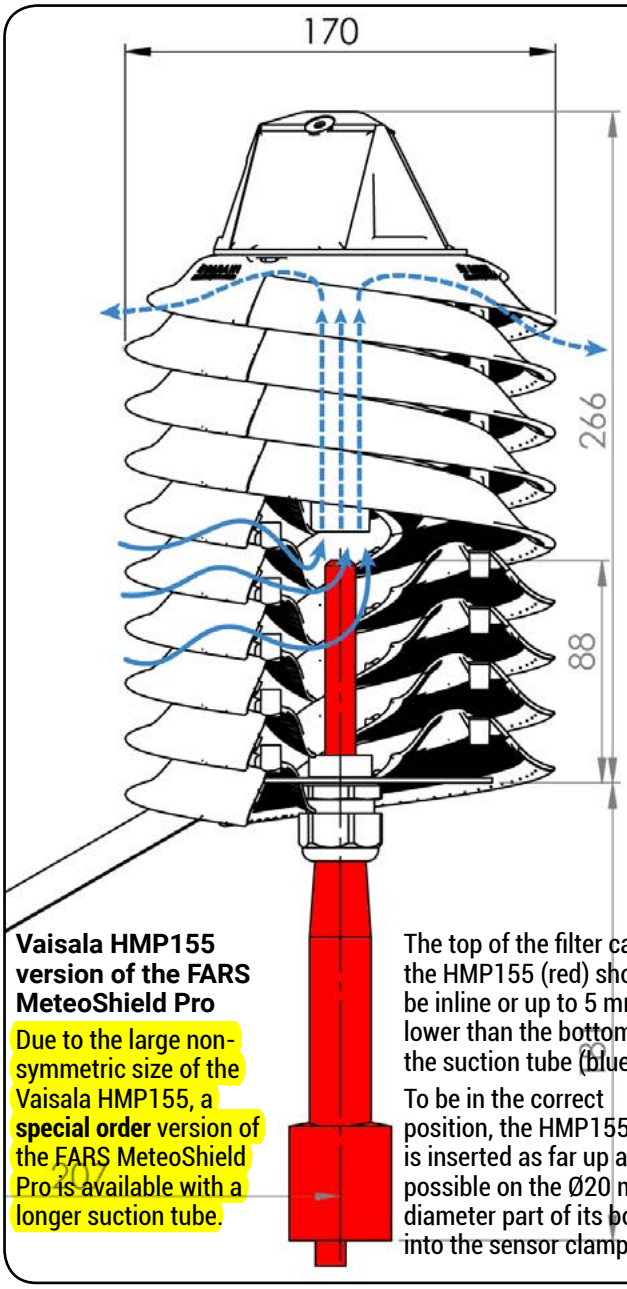

Vaisala HMP155 version of the FARS MeteoShield Pro

Due to the large non-symmetric size of the Vaisala HMP155, a **special order** version of the FARS MeteoShield Pro is available with a longer suction tube.

The top of the filter cap on the HMP155 (red) should be inline or up to 5 mm lower than the bottom of the suction tube (blue).

To be in the correct position, the HMP155 is inserted as far up as possible on the Ø20 mm diameter part of its body into the sensor clamp.

Electrical specifications	
Electrical Interface RPM Output	Cable with 2 leads, any polarity. Reed switch pulse output with 24 Ω resistance (1 pulse/rev), 2600 RPM max, switched GND. Recomended current & voltage for long life < 0.5 mA & ≤ 2.5 V. Max allowed 10 mA & 15 V.
Power supply	Solar powered by 3 solar cells at 63° & 120° appart for all weather performance. No external power.
Lightning protection	per IEC EN 61000-4-5, Surge, EFT/Burst, ESD 15 kV
Environmental ratings	
Environmental Limits	Solar fan module: -40 °C to +60 °C, 0 % to 100 % RH; Radiation shield: -80 °C to +80 °C, 0 % to 100 % RH
Survival wind speed	> 85 m/s (306 kph, 190 mph) gust, including sustained 60 m/s, (216 kph, 135 mph)
IP – Protection rating	IP65W (DIN 40050)
General specifications	
Weight (mass)	Shield without mount = 0.8 kg, Mounting bracket =1.3 kg
Dimensions	Diameter = Ø170 mm, Total height = 265 mm without mounting bracket
Patented / Registered	OHIM 002979179-0001...0006, WIPO DM/090 822
Mounting	Three M4 threaded rods with nuts and lock washers (includes a stainless steel mount).

Copyright©2017-2022 BARANI DESIGN Technologies s. r. o.

Computational Fluid Dynamic (CFD) simulation of air low during different conditions:

1. Zero wind conditions rely on fan-assisted airflow around the sensor tip. Due to the helical shield shape, the internal 3D flow around the sensor is actually spiral, and the highest airflow speeds are concentrated around the sensor measuring tip. Minimal air disturbance around the outside of the shield is achieved by minimizing the volume flow rate by creating airflow only in close proximity to the sensor measuring tip.
2. For wind speeds less than around 0.5 m/s (1.8 kph, 1.1 mph), flow is still dominated by fan ventilation around the temperature sensor measuring tip.
3. As wind speeds approach 1 m/s (3.6 kph, 2.2 mph), natural ventilation starts to dominate the flow inside the shield.
4. In the event of the fan not functioning or being turned off during zero solar radiation conditions (such as nighttime) the flow is purely naturally ventilated. It can be seen that already at only 1 m/s (3.6 kph, 2.2 mph) the difference between the natural ventilation with and without fan augmentation is minimal due to the high airflow of the helical shield design, thus ensuring accurate measurement even when the fan is not running.

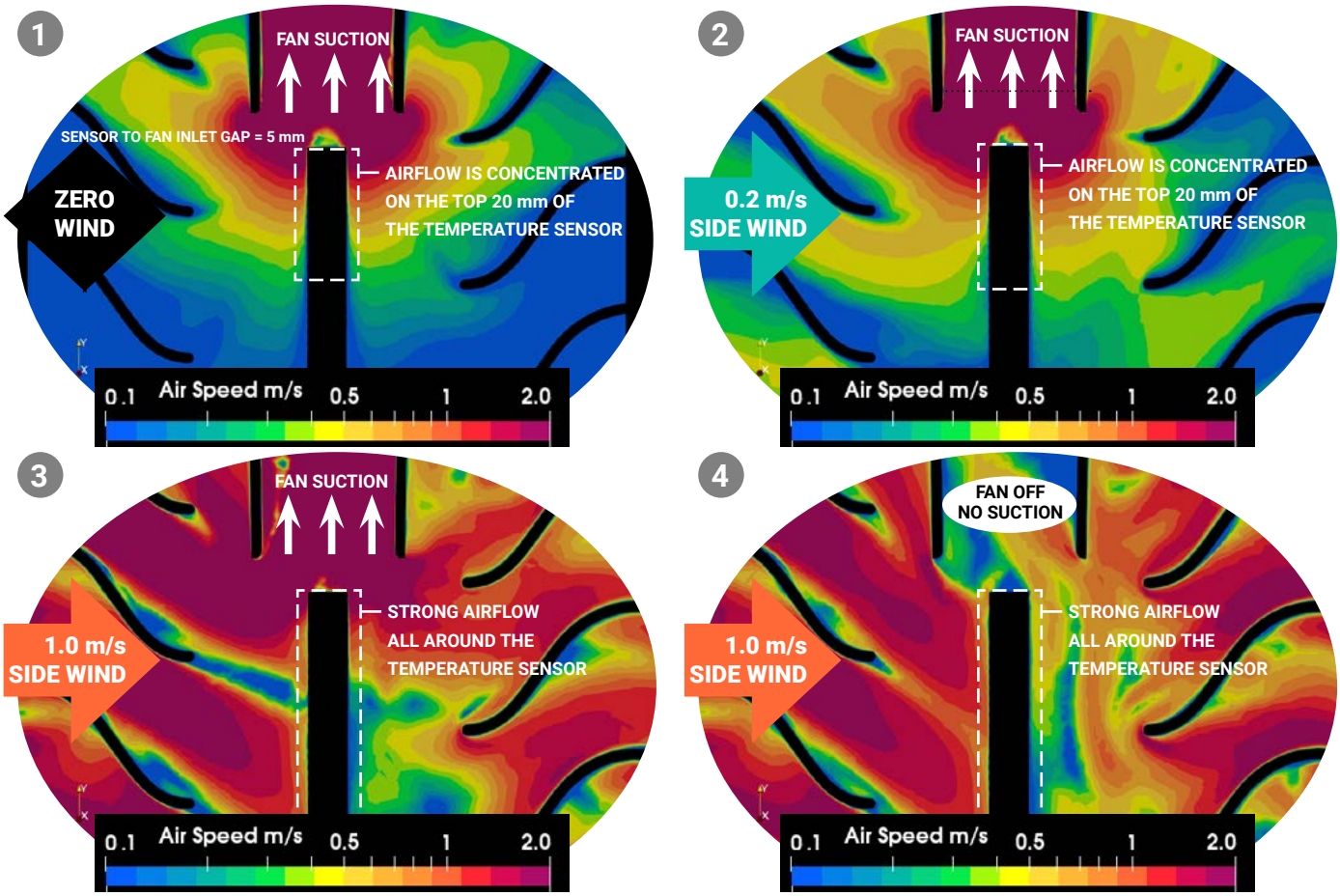

IMPORTANT NOTE:

FARS screens not measuring air temperature representative of installation height due to fan mixing errors.

We do not recommend fan-ventilating at night or when there is not enough solar load to create temperature sensor errors.

In most situations, there is a natural air temperature gradient above ground, and fans cause air from different heights to mix, leading to temperature readings not representative of the temperature sensor installation height. These hidden errors, in many cases, can be more significant than errors due to sensor accuracy or naturally ventilated radiation shield performance.

This hidden error from fan ventilation can be easily seen in greenhouses since they have very slow air movement and large vertical thermal gradients. For example, comparing a third-party FARS screen at the same height as a non-aspirated MeteoShield Pro (or an aspirated MeteoShield Pro), the effect of FARS fan mixing air at different temperatures from different heights can be seen clearly.

Similar air conditions happen on low-wind sunny days or cold, low-wind nights where a significant thermal gradient exists near the ground. Only during daytime with very low winds, where naturally ventilated shield error may be larger than the error due to fan mixing air from different heights, is fan aspiration necessary to minimize total measurement error.

Copyright©2017-2022 BARANI DESIGN Technologies s. r. o.

Servicing of the Fan

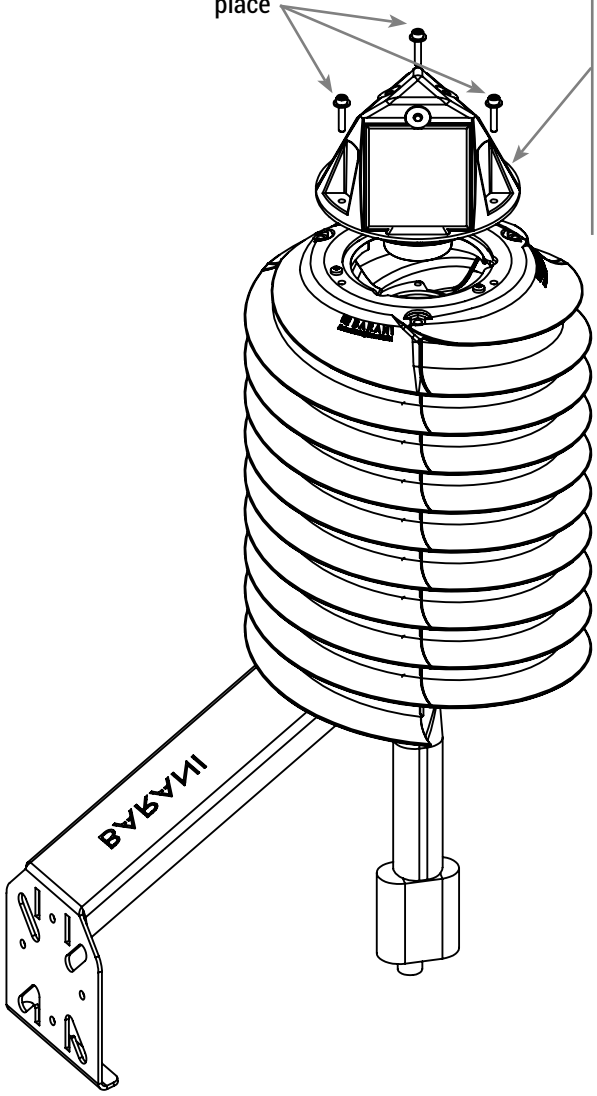

Removing the fan unit

All of the electronics, solar cells and electric motor are housed in the removable fan unit, for easy servicing or replacement.

Removing the fan unit consists only of unscrewing the three M3 socket head screws and takes a total of 2 minutes.

Replacement of the fan unit involves only securing the three M3 socket head screws and takes a total of 2 minutes.

Fan unit information

The fan is designed to offer long-term performance and features stainless steel ball bearings.

Fan rpm varies from 0 - 2500 RPM with variations due to atmospheric conditions.

Optional fan speed output is via a reed switch connection properly set the sensor height relative to the fan air inlet, use the supplied jig (red).

Proper sensor height ensures that the sensor will have very good unobstructed airflow from natural ventilation when the fan is off, and also very good air flow augmentation when the fan is ON.

Fan speed output

Only fan units with fan speed output have a cable.

Fan speed output is in Hz. 1 Hz = 60 rpm

Normaly Open (NO) reed switch in series with a 24 Ω resistor located inside the removable dan unit indicates fan speed.

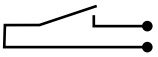

Depending on your data logger, a reed switch input may require debouncing.

Copyright©2017-2022 BARANI DESIGN Technologies s. r. o.