MeteoTemp® RH+T + Pressure

BARANI meteo innovations

- AGRICULTURE
- AIRPORTS
- BUOY & MARINE
- COASTAL
- HYDROLOGY
- INDUSTRIAL & PLC
- INTRINSICALLY SAFE
- IOT
- METEOROLOGY
- OCEANOGRAPHY
- ROAD MANAGEMENT
- POLAR AND WINTER
- SHIPS
- SKI LIFT & SNOW MAKING
- SMART CITIES
- WEATHER STATIONS

WMO performance Temperature and humidity



MeteoTemp RH+T

2-in-1 meteorological sensor probe with waterproof connector. **Temperature, Humidity, Dew point** and **Frost point** output. Ultra-low 800 micro Amp power consumption **eliminates self heating** in Meteorological applications. Meets WMO requirements for accurate air temperature, humidity and long term stability.

Also features triple lightning protection and Surge, Transient & ESD protection.

Temperature + humidity + pressure

MeteoTemp RH+T with pressure

3-in-1 sensor probe with the same form factor as above 2-in-1 probe. Adds **Pressure** to the already superb **Temperature, Humidity, Dew Point** and **Frost Point** probe without increasing power consumption to maintain the same WMO accuracy requirements for Temperature and Humidity. Features a highly reliable sealed barometric pressure transducer in the sensor head.

Also features triple lightning protection and Surge, Transient & ESD protection.

Type	Accuracy		Stability	Resolution	Measuring range	Response*	Meets WMO
Temperature (silicon type)	±0.10 °C (0 to +65 °C), Below 0 °C: increases linearly to ±0.20 °C at −45 °C, ±0.20 °C maximum over full range		<0.02°C per year	0.01°C	-45°C...105°C	5-30s	yes
Relative Humidity (capacitive type)	0–80%RH: −45 to 0 °C: ±3.95 → ±2.05%RH 0 to +25 °C: ±2.05 → ±1.30%RH +25 to +50 °C: ±1.30 → ±2.05%RH	80–100%RH: Add ±0.025%RH for each 1%RH above 80% Short-term hysteresis: ≤±1.0%RH additional.	<0.25%RH per year	0.01%RH	0...100%RH	8-30s	yes
Dew point / Frost point (All values calculated at 90 %RH[1])	±0.39 °C DPw at +25 °C ±0.46 °C DPw / ±0.40 °C FPi at 0 °C Road-NaCl reference: ±0.44 °C FPi at −7 °C		-	0.01°C	Calculated output range: dependent on temperature and RH	8-30s	yes
Barometric Pressure (piezo-resistive type)	±0.5 hPa (0 - 55 °C & 750 - 1100hPa), else ±0.8 hPa		0.5 hPa per year	0.02hPa	300...1100hPa	0.1s	no

* τ63% excludes filter-cap effects; airflow, contamination, and cap condition affect response. Accuracy applies after equilibrium with no liquid water, frost, or ice on the sensor. RH limits include nonlinearity, repeatability, and temperature dependence; ≤±1.0%RH hysteresis, drift, and post-condensation/frost recovery are additional. Above 80%RH, add 0.025%RH per 1%RH, up to +0.50%RH at 100%RH. RH accuracy is specified from −45 to +50 °C. DPw/FPi denote saturation over water/ice; listed 90%RH bounds include the +0.25%RH high-RH allowance but exclude hysteresis. −7 °C is a practical NaCl road-treatment reference, not the freezing point of brine.

Ultra-low power with no self-heating

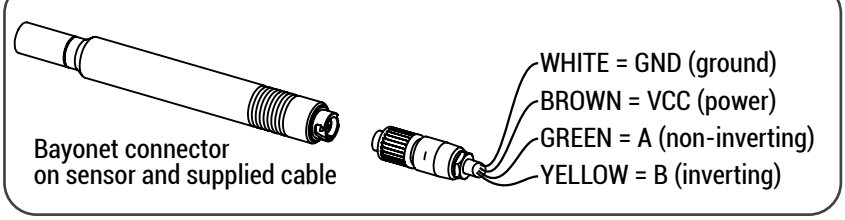

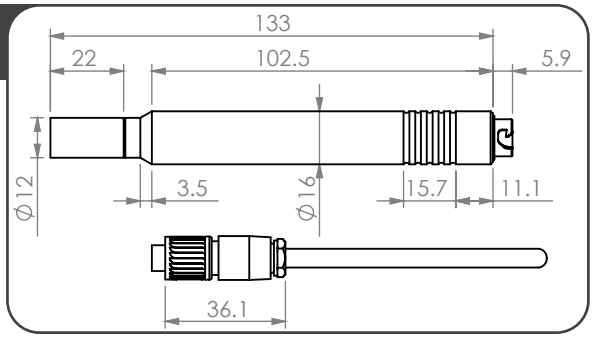

FOR APPLICATIONS WHERE WMO ACCURACY AND RELIABILITY WITH LIGHTNING PROTECTION AND ALL-WEATHER RESISTANCE IS IMPORTANT

Copyright©2017-2026 BARANI DESIGN Technologies s.r.o. | baranidesign.com | sales@baranidesign.com | Rel. date: 2026 July 22

MeteoTemp® RH+T + Pressure

BARANI meteo innovations

Electrical specifications of sensor		
Output signal & communication	RS-485 with Modbus RTU or ASCII	
Supply Voltage	5...24 VDC with reverse polarity protection (startup in-rush <100mA for 1ms)	
Power consumption	800 µA at 1Hz output including RS485 communication, 25 µA quiescent	
Lightning & surge protection	per IEC EN 61000-4-2, EN 61000-4-4, EN 61000-4-5 on both data & power lines, Surge, EFT/ Burst, ESD 15 kV	
Environmental rating of sensor		
Operating temperature & humidity	-45°C to +105°C	0% to 100%RH
Connection	Bayonet connector with silicone o-ring	
IP – Protection rating	IP66W (DIN 40050)	
General specifications		
Dimensions	Length = 133 mm (164 mm with mating connector), Ø16 mm base, Ø12 mm PTFE sensor cap	

For total highest measurement accuracy & lowest uncertainty in outdoor temperature & humidity measurement use MeteoTemp in combination with the only helical radiation shield MeteoShield

MeteoShield - Professional

Naturally aspired helical solar shield/screen. **Double-Helix shape eliminates** temperature errors from solar radiation more effectively than conventional multi-plate shields while offering unsurpassed **protection from the sun, dirt, rain, snow, sand & dust**. Double-helix increases clean air flow and rejects dirt particles away from the sensor, while keeping sensors cleaner than traditional multi-plate and fan aspirated shields.

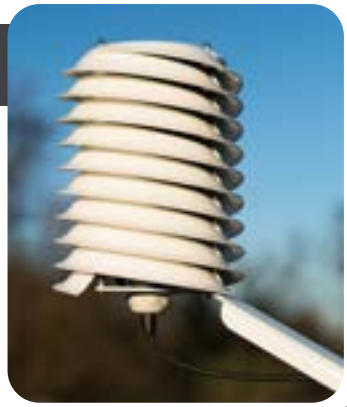

Our **RS485 MODBUS-to-Analog converter** adds a **triple layer of lightning protection**, surge & ESD protection between digital sensors like the MeteoTemp RH+T and MeteoWind and your data logger or PLC.
Available sensor converter interfaces:

Input from sensors: RS-485 MODBUS ASCII or RTU
Output to logger: 0 - 1 V

Double-Helix Benefits

Helical radiation shield shape ventilates better than multi-plate radiation shields while maintaining better temperature sensor protection from dirt, sand, dust, rain, snow and ice.

BENEFITS:

- Extending sensor life
- Long-term measurement stability

Helix performs better than many fan-ventilated radiation shields in high reflectivity environments such as over snow, water, pavement or building walls.

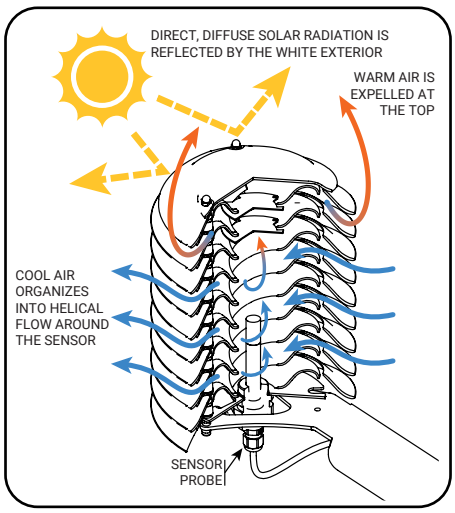

MeteoShield - Professional
Helical solar radiation shield

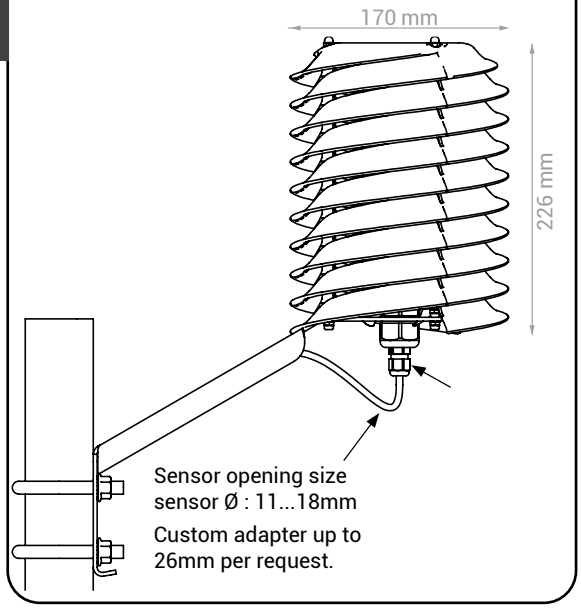

Reach your Gold Standard of measurement with BARANI sensors. ISO:9001 quality.

Copyright©2017-2026 BARANI DESIGN Technologies s.r.o. | baranidesign.com | sales@baranidesign.com | Rel. date: 2026 July 22